## **FWC303SS** Freestanding/ under counter slimline wine cooler

### Features

- Single temperature storage zone
- Black plinth
- UV-protective smoked toughened glass door
- Wooden slide-out shelves: 5
- Temperature memory function
- Electronic temperature control
- LED interior lighting
- Height adjustable feet
- Height adjustable plinth section
- Over temperature alarm
- Reversible door
- Exterior colour of cabinet: Black
- Interior colour of cabinet: Black

### Technical specification
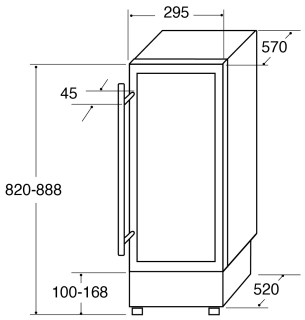
- Power supply required: 13A
- Temperature range: 5 to 22
- Compressor driven
- Climate class: N
- Power cable colour: Black
- Power cable length: 1.8m
- Refrigerant type: R600a
- Total capacity: 65/60
- UK plug