KMG31BL Composite undermount/inset 1.5 bowl sink

Features

- Granite/quartz construction

Design
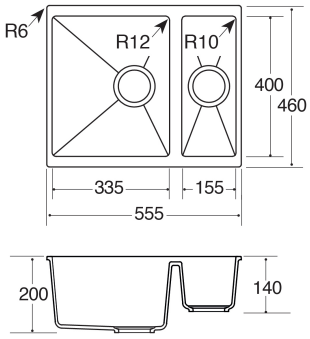
- Inset/ undermount: Can be undermount or inset