TV9BL Contemporary square side single lever tap

Features

- Single flow
- Finish: Matt black
- WRAS approved
- Monobloc
- 360° spout rotation
- Ceramic disc single lever valve
- Non return valve supplied
- Minimum pressure: 0.5Bar
- Maximum operating pressure: 5.5Bar
- Recommended maximum water temperature: 46-70
- Number of levers/ handles: 1
- Branded: No
- Supplied in bag: Yes
- Max worktop thickness: 70mm
- Diameter of cutout required: 35mm
- Fixing stud to suit worktop size: 120mm

Accessories
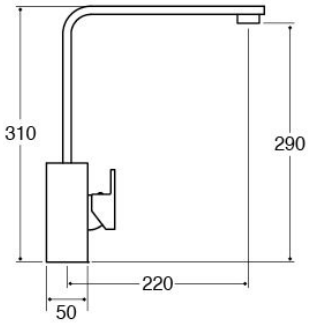
- Supplied with flexible tail pipes
- Tail pipe length: 260mm