FWV452BL Integrated compact wine cooler

Features
- Single temperature storage zone
- Triple glazed door
- UV-protective smoked toughened glass door
- Wooden slide-out shelves: 3
- Display light function
- Energy saving mode
- Temperature memory function
- Humidifier to maintain 50-80% RH
- Electronic temperature control
- LED interior lighting
- Over temperature alarm
- Door open alarm
- Reversible door

Technical specification
- Net cabinet volume: 63
- Noise level: 39dBA
- Total bottle storage: 24(75cl Bordeaux bottles)
- Total bottle storage: 24
- Rated electrical power: 85W
- Gross cabinet volume: 66
- Compressor driven
- 230-240
- Temperature range: 5 to 20
- Climate class: ST
- Refrigerant type: R600a
- Refrigerant charge: 16g
- UK plug
- Mains lead
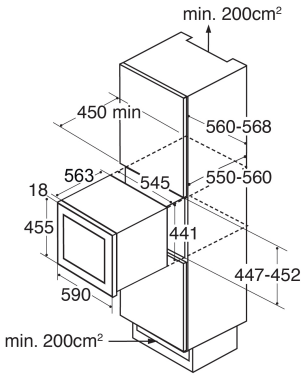
Energy
- Noise level class: C
- Noise level: 39
- Energy rating: G
- Energy consumption per annum: 153kW.h